www.ersatzteil-service.de

TRACTOR - - MODEL NUMBER CT12T38E

CHASSIS

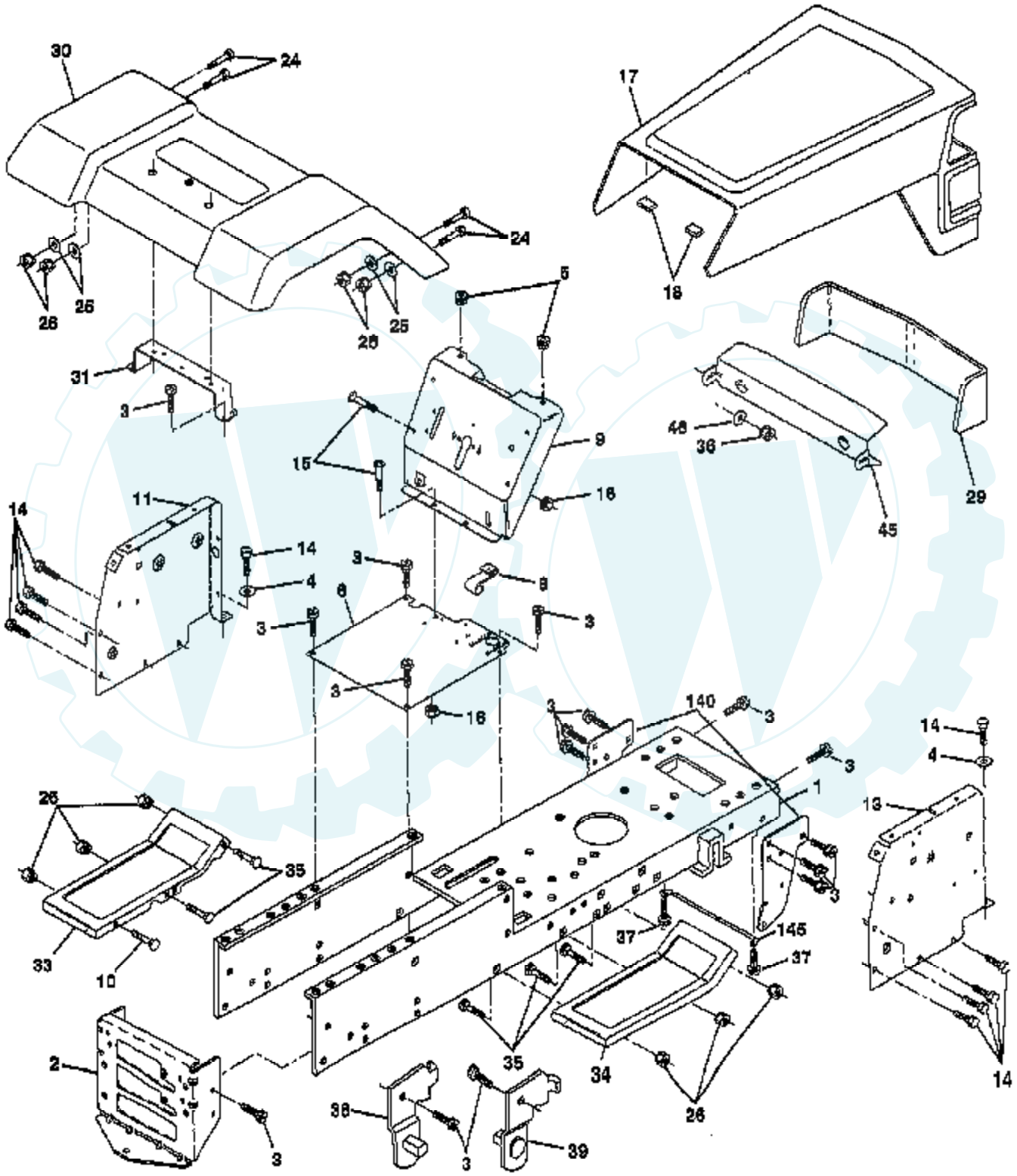

Der Ersatzteilspezialist im Internet.

www.ersatzteil-service.de

Ref #	Part Number	Qty	Description
1	165480		CHASSIS.STAMPING
2	140356		SUB= 145009
3	17490612		SCREW
4	19131216		WASHER
5	155272		BUMPER-HOOD/DASH
6	155924X010		"SADDLE FLAT,SLKSC"
8	155138		CLIP.RETAINER
9	166318X010		DASH.SLKSCR
10	72140608		SUB= 72110608
11	155927		"PANEL-DASH,LH"
13	155934X010		SUB= 169117X010
14	17490608		SCREW LT
15	74180512		SCREW
16	73510500		NUT
17	133956X505		HOOD/GRILL ASM
18	126938X		SUB= 532126938
24	74780616		BOLT
25	19131312		WASHER
26	73800600		NUT
29	133954		LENS SERVICE KIT
30	166884X505		FENDER
31	136619		BRKT FENDER
33	105476X505		FOOTREST LH
34	105475X505		FOOTREST RH
35	72110606		BOLT
36	108067X		PAL NUT LT
37	17490508		SCREW LT
38	139886		BRACKET ASM LH
39	139887		BRACKET ASM RH
45	132257X417		BEZEL.LIGHT.SLVR
46	127316X		RETAINER
140	158418		BRKT SUSPENSION
145	156524		"ROD POVOT,CHASSIS"
	5479J		PLUG BUTTON T

Der Ersatzteilspezialist im Internet.

www.ersatzteil-service.de

TRACTOR - - MODEL NUMBER CT12T38E

DECALS

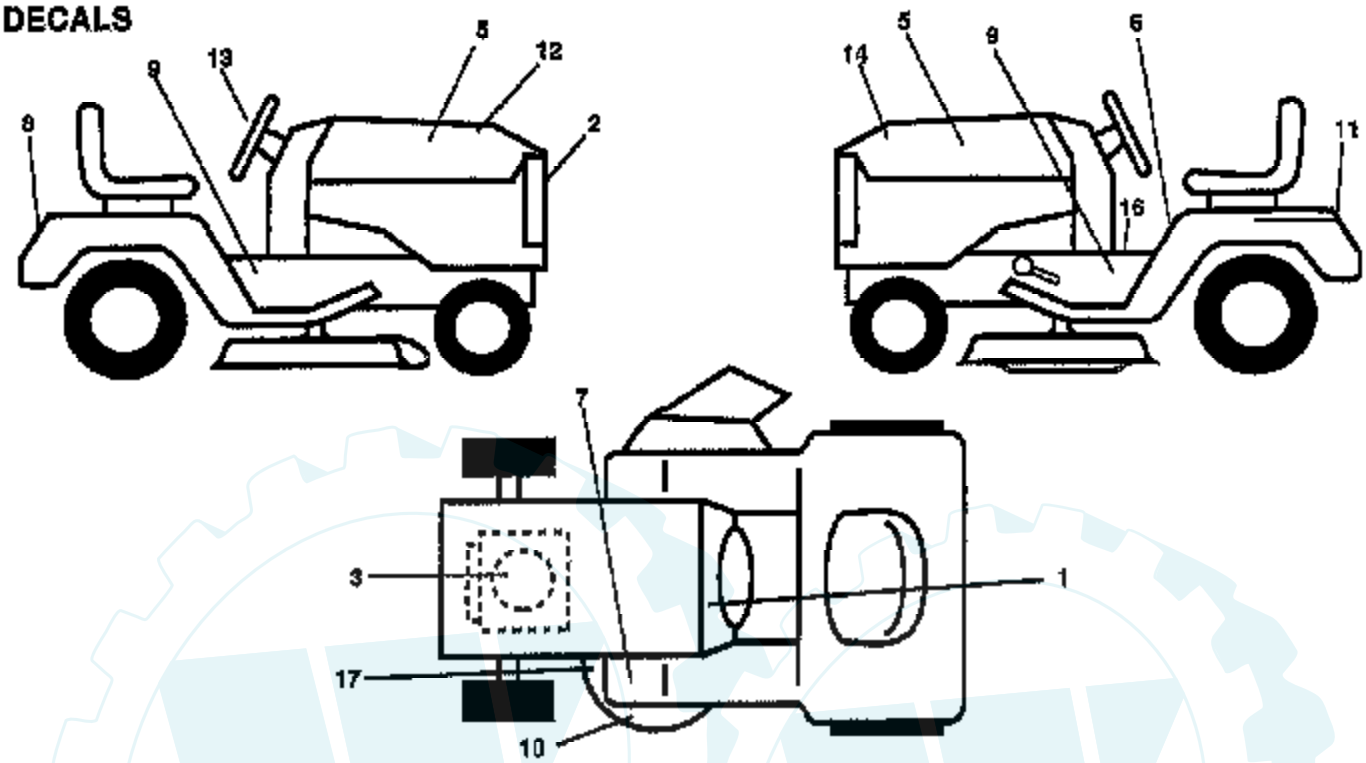

NOTE: All component dimensions given in U.S. inches
1 inch = 25.4 mm.

Der Ersatzteilspezialist im Internet.

www.ersatzteil-service.de

Ref #	Part Number	Qty	Description
1	156834		"DECAL-OPER,GEAR D"
2	132627		GRILL DECAL
3	64-1724-29		DECAL, ENGINE
5	157822		"DECAL INSERT,HOOD"
6	157002		"DECAL DANGER,FEND"
7	4900J		DECAL T
8	132628		FENDER DECAL
9	144465		"DECAL.CHASSIS.38""""
10	135013		NLA
11	145005		DECAL.BATRY.3-3908
12	141745		DECAL HOOD RH RLY
13	127075		"DECAL,STR WHL"
14	141746		DECAL HOOD LH RLY
16	140837		DECAL BRAK PARK
17	136832		DECAL
	138311		DECAL HANDLE LIFT
	158122		MANUAL.O.CT12T38A
	168729		MANUAL, PARTS
	MK380		KIT.MULCHER
	C38		GRASS CATCHER

Der Ersatzteilspezialist im Internet.

www.ersatzteil-service.de

TRACTOR - - MODEL NUMBER CT12T38E

DRIVE

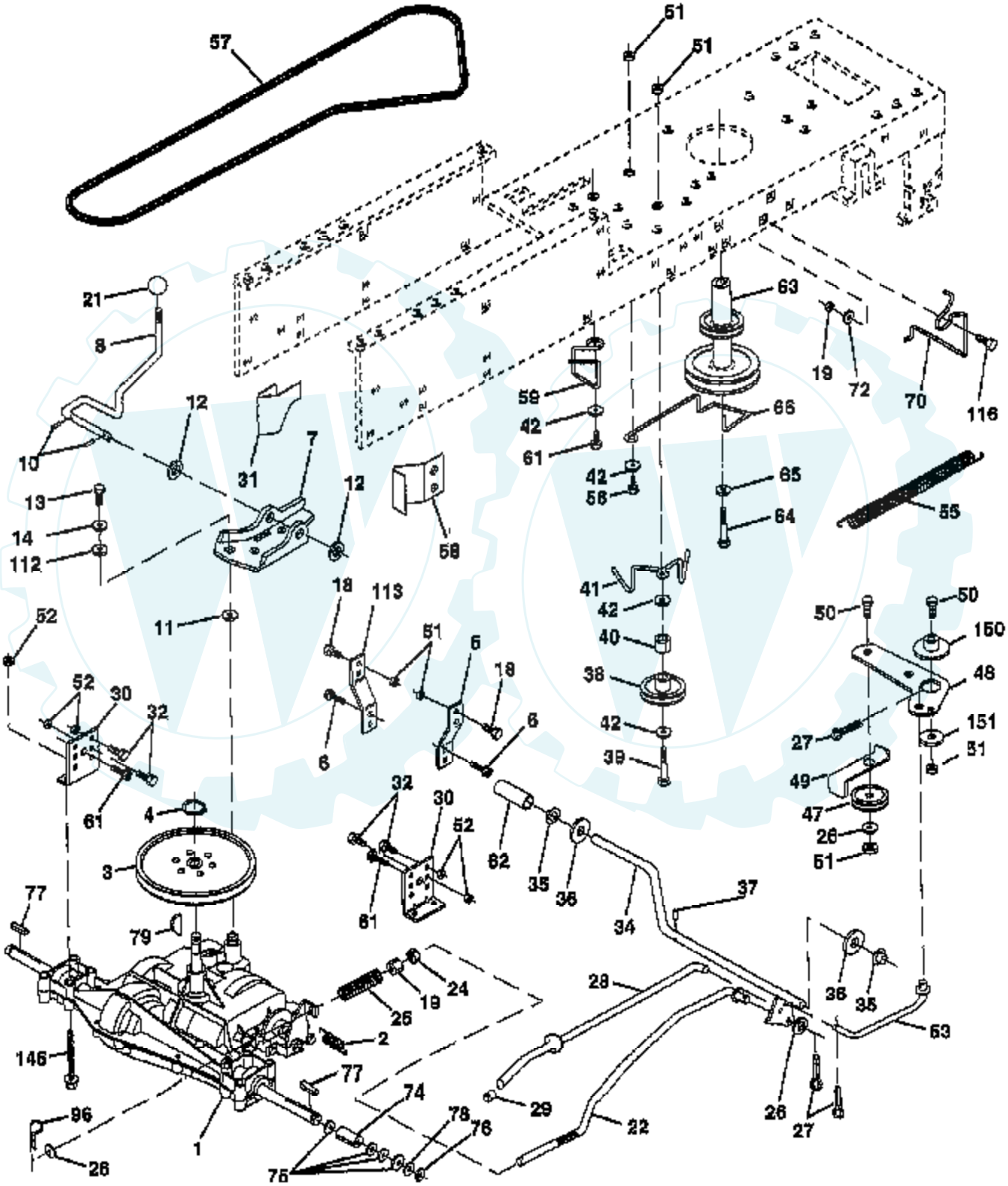

Der Ersatzteilspezialist im Internet.

www.ersatzteil-service.de

Ref #	Part Number	Qty	Description
1	SUPPLIER		CHECK WITH SUPPLIER
2	146682		SPRING.BRAKE.RETU
3	123666X		PULLEY TRANS
4	12000028		SUB= 2267J
5	121520X		STRAP TORQUE
6	17490512		SCREW
7	162240		BRKT.SADDLE.SHIFT
8	131679		SHIFT ROD
10	76020416		PIN COTTER 1/8
11	105701X		WASH-SHFT PLT LT
12	19151216		WASHER
13	74550412		BOLT.1/4-28.W/PAT
14	10040400		LOCKWASHER
18	74780616		BOLT
19	73800600		NUT
21	106933X		KNOB T (1/2-HOLE)
22	130804		BRAKE ROD
24	73350600		NUT
25	106888X		SPRING ROD LT
26	19131316		WASHER
27	76020412		COTTER PIN
28	145204		ROD.BRAKE.PARK.LT
29	71673		PLUNGER CAP T
30	130807		TRANSAXLE MTG BKT
31	127275X		"KEEPER,BELT LH T"
32	74760512		BOLT
34	155071		SHAFT ASM-PEDAL F
35	120183X		NYLON BEARING
36	19211616		WASHER LT
37	1572H		SUB= 2882J
38	131494		FLAT IDLER PULLEY
39	74760644		BOLT
40	4470J		SPACER T
41	165838		"KEEPER,BELT.IDLER FLAT"
42	19131312		WASHER
47	127783		SUB= 139245
48	154407		BELLCRANK.CLUTCH
49	123205X		RETAIN BELT
50	74760624		SUB= 74930624
51	73680600		SUB= 73690600
52	73680500		SUB= 73690500
53	105710X		"LINK, CLUTCH T"
55	105709X		"SPRING, RETURN LT"
56	74760620		SUB= 74780620
57	130801		SUB= 138255
58	127274X		"KEEPER,BELT RH T"
59	140312		KEEPER BELT CNTSP
61	17490612		SCREW
62	8883R		PEDAL COVER T
63	140186		PULLEY.ENGINE
64	71170764		BOLT
65	10040700		LOCKWASHER
66	154778		KEEPER-BELT
70	134683		KEEPER BELT ENG
72	19132012		WASHER
74	137057		SPACER AXLE
75	121749X		WASHER
76	12000001		E-RING LT

Der Ersatzteilspezialist im Internet.

www.ersatzteil-service.de

Ref #	Part Number	Qty	Description
77	123583X		SQUARE KEY
78	121748X		WASHER
79	2228M		SUB= 2228M1
96	4497H		RETAINER M
112	19091210		WASHER LT
113	127285X		"STRAP,TORQUE"
116	72110610		BOLT RDHD 3/8-16
145	74490540		BOLT.HEX.FLGHD
150	165850		BUSHING.BELLCRANK.GRD.DR
151	19133210		WASHER

Der Ersatzteilspezialist im Internet.

www.ersatzteil-service.de

TRACTOR - - MODEL NUMBER CT12T38E

ELECTRICAL

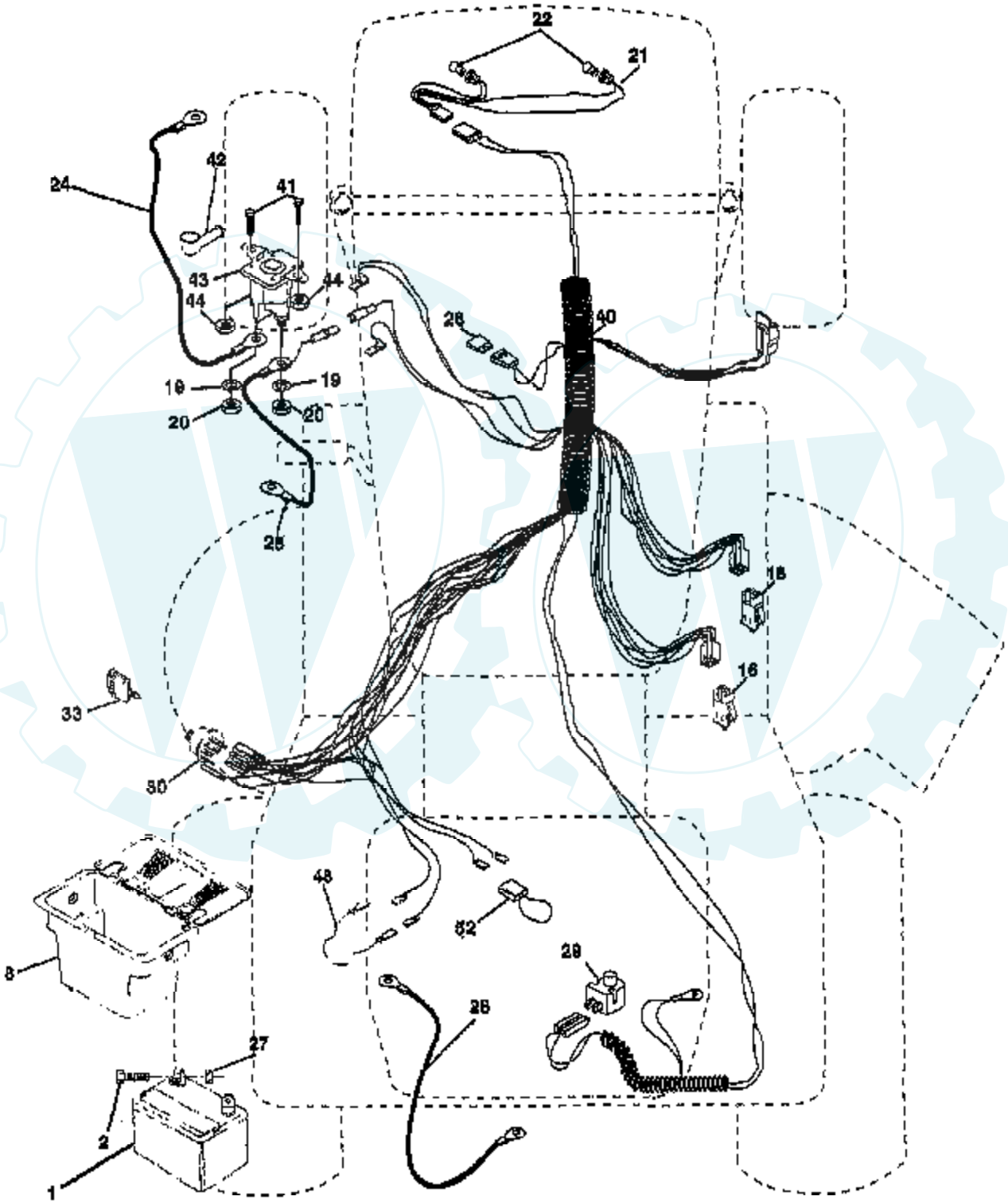

Der Ersatzteilspezialist im Internet.

www.ersatzteil-service.de

Ref #	Part Number	Qty	Description
1	144925		SUB= 123899X
2	74760412		BOLT LT
8	156417		"CASE,BATTERY.MECH"
16	153664		SWITCH INTERLOCK
19	10090400		SUB= 10040400
20	73350400		NUT
21	166181		HARNESS.ASM.LIGHT W/4152J
22	4152J		HEADLAMP BULB
24	108423X		CABLE ASM.
25	146147		CABLE.BTRY.6GA.RD
26	166180		FUSE.15 AMP
27	73510400		NUT
28	4207J		CABLE T
29	121305X		SWITCH SEAT
30	163968		SWITCH.IGN.
33	140401		KEY MLD GEN DELTA
40	166151		IGNITION.HARNESS/MECH
41	71110408		BOLT HXHD FIN
42	131563		SUB= 154336
43	145673		SUB= 146154
44	73640400		NUT HXKEP 1/4X20
48	140844		ADAPTER AMMETER
52	141940		PROTECTION LOOP

Der Ersatzteilspezialist im Internet.

www.ersatzteil-service.de

TRACTOR - - MODEL NUMBER CT12T38E

ENGINE

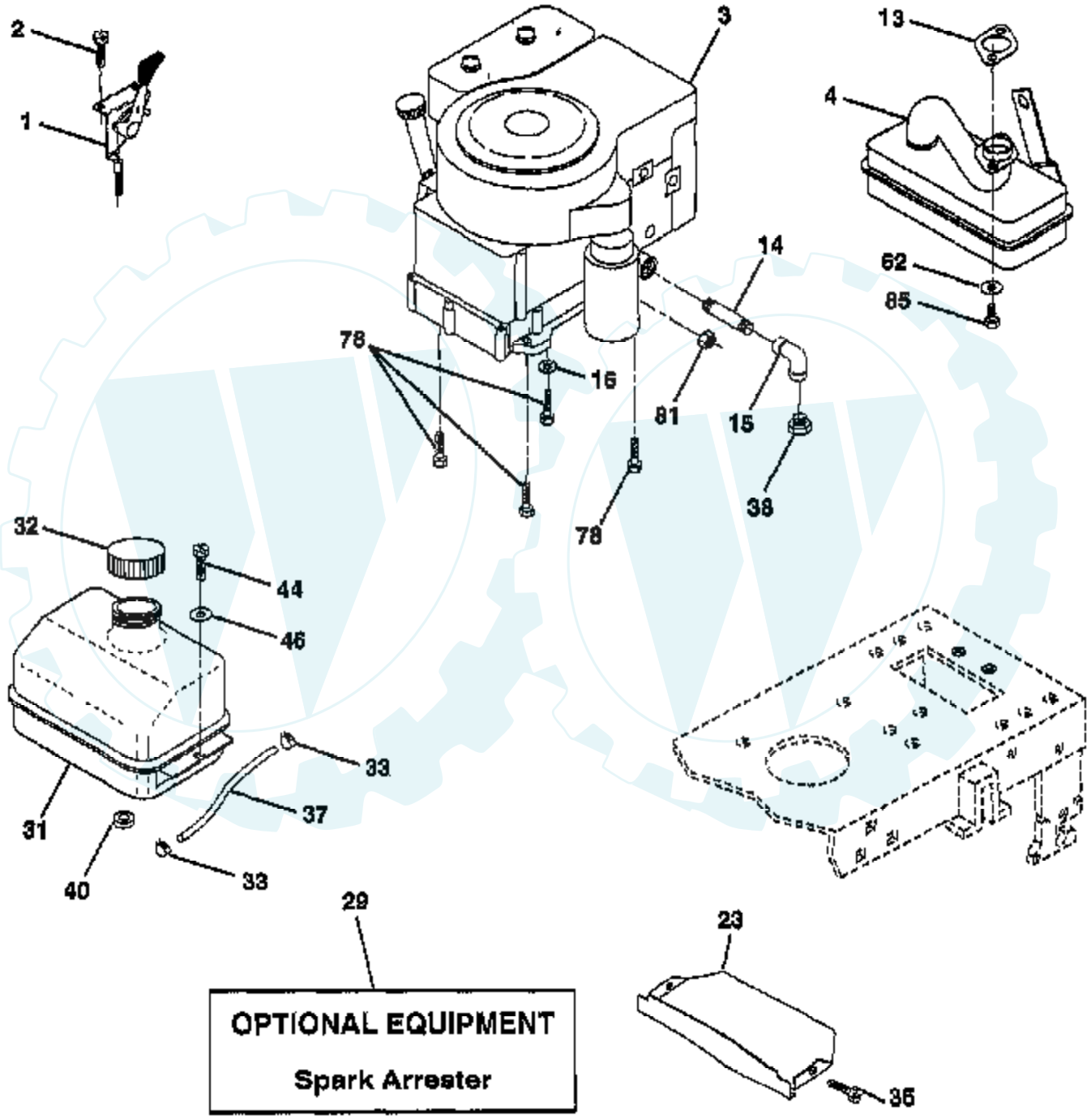

Der Ersatzteilspezialist im Internet.

www.ersatzteil-service.de

Ref #	Part Number	Qty	Description
1	132771		THROTTLE CONTROL
2	17720410		SCREW LT
3	SUPPLIER		CHECK WITH SUPPLIER
4	156700		MUFFLER TEC. 13HP
13	165291		SUB= 272293
14	13280336		PIPE NIPPLE LT
15	13200300		ELBOW
16	11050600		LOCKWASHER
23	159880		SHIELD.BRN/DBR.GD
29	137180		SUB= 532137180
31	109202X		TANK.FUEL.LT.
32	140527		CAP ASM FUEL
33	123487X		HOSE CLAMP
35	17490512		SCREW
37	137040		LINE FUEL
38	SUPPLIER		CHECK WITH SUPPLIER
40	124028X		SUB= 532124028
44	17490412		SCREW HEX CRT
46	19091416		WASHER
62	10040500		LOCKWASHER
78	17490620		SCREW
81	128861		NUT
85	123528X		SCREW HEX HD CAP

Der Ersatzteilspezialist im Internet.

www.ersatzteil-service.de

TRACTOR - - MODEL NUMBER CT12T38E

MOWER

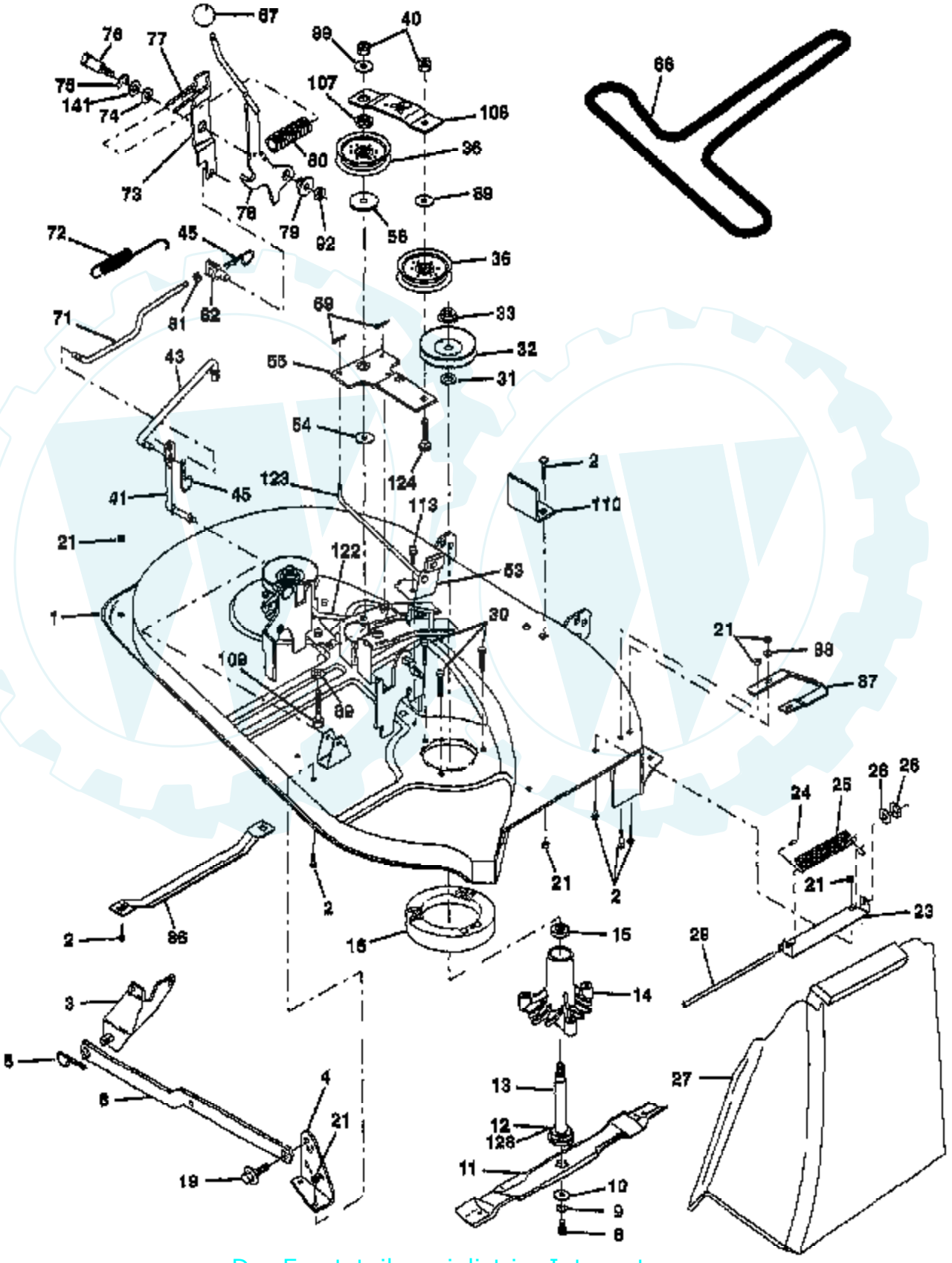

Der Ersatzteilspezialist im Internet.

www.ersatzteil-service.de

Ref #	Part Number	Qty	Description
1	142829		SUB= 145775
2	72140506		BOLT
3	138017		BRKT ASM SWAY BAR
4	138440		BRKT DECK SW BAR
5	4939M		SUB= 85902
6	130832		SUB= 130833
8	850857		BLADE BOLT
9	10030600		SUB= 10040600
10	140296		WASHER.HARD.BLADE
11	138497		"BLADE.38"" HIPERF"
12	129895		BEARING.BALL
13	137645		SUB= 137646
14	128774		HSG ASM MANDREL
15	110485X		BEARING
16	140329		STRIPPER RND MWR
19	132827		BOLT SHD 5/16-18
21	73680500		SUB= 73690500
23	137607		BRKT DEFLECTOR
24	105304X		CAP-SLEEVE LT
25	123713X		SPRING TORSION
26	110452X		NUT PUSH M
27	106736X		DEFLECTOR-SHLD T
28	19111016		WASHER
29	106735X		ROD-HINGE T
30	157722		"SCREW-THD ROLL,WA"
31	129963		WASHER
32	153532		PULLEY.MANDREL.38
33	137266		SUB= 139729
36	131494		FLAT IDLER PULLEY
40	73680600		SUB= 73690600
41	133551		PIVOT ROD
43	133504		CLUTCH ROD SECOND
45	4497H		RETAINER M
53	130840		BRAKE ASM
54	133943		HARDENED WASHER
55	133840		IDLER ARM ASSY
56	122052X		SPACER RETAINER
67	162132		KNOB.RD.7/16-14
68	144200		BELT.V.T-PATH
69	76020312		SUB= 3145
71	142427		ROD CLUTCH 38/42
72	131870		RETURN SPRING
73	127847		CLUTCH ARM SECOND
74	121748X		WASHER
75	12000029		RING
76	128903		SHOULDER BOLT
77	127845		SPRING KEEPER
78	160571		LEVER.ASM.CLUTCH
79	127498		BUSHING
80	153701		SPRING.CLUTCH.MWR
81	73350600		NUT
82	142028		TRUNION ADJ
86	7631J		RUNNER-LH M
87	128772		RUNNER RH
88	19111216		WASHER M
89	19131612		WASHER GT
92	73800600		NUT
107	133502		RETAINER SPACER

Der Ersatzteilspezialist im Internet

www.ersatzteil-service.de

Ref #	Part Number	Qty	Description
108	133503		IDLER ARM STIFF
109	74760640		BOLT
110	142587		UPSTOP DECK FT 38
113	17490512		SCREW
122	131289		BRAKE ROD LH
123	131288		BRAKE ROD RH
124	72110614		BOLT
128	153390		WASHER.FELT.
141	6266H		WASHER .T
	145758		DECK.SERV.38.HLMC
	130794		MANDREL ASM

Der Ersatzteilspezialist im Internet.

www.ersatzteil-service.de

TRACTOR - - MODEL NUMBER CT12T38E

MOWER LIFT

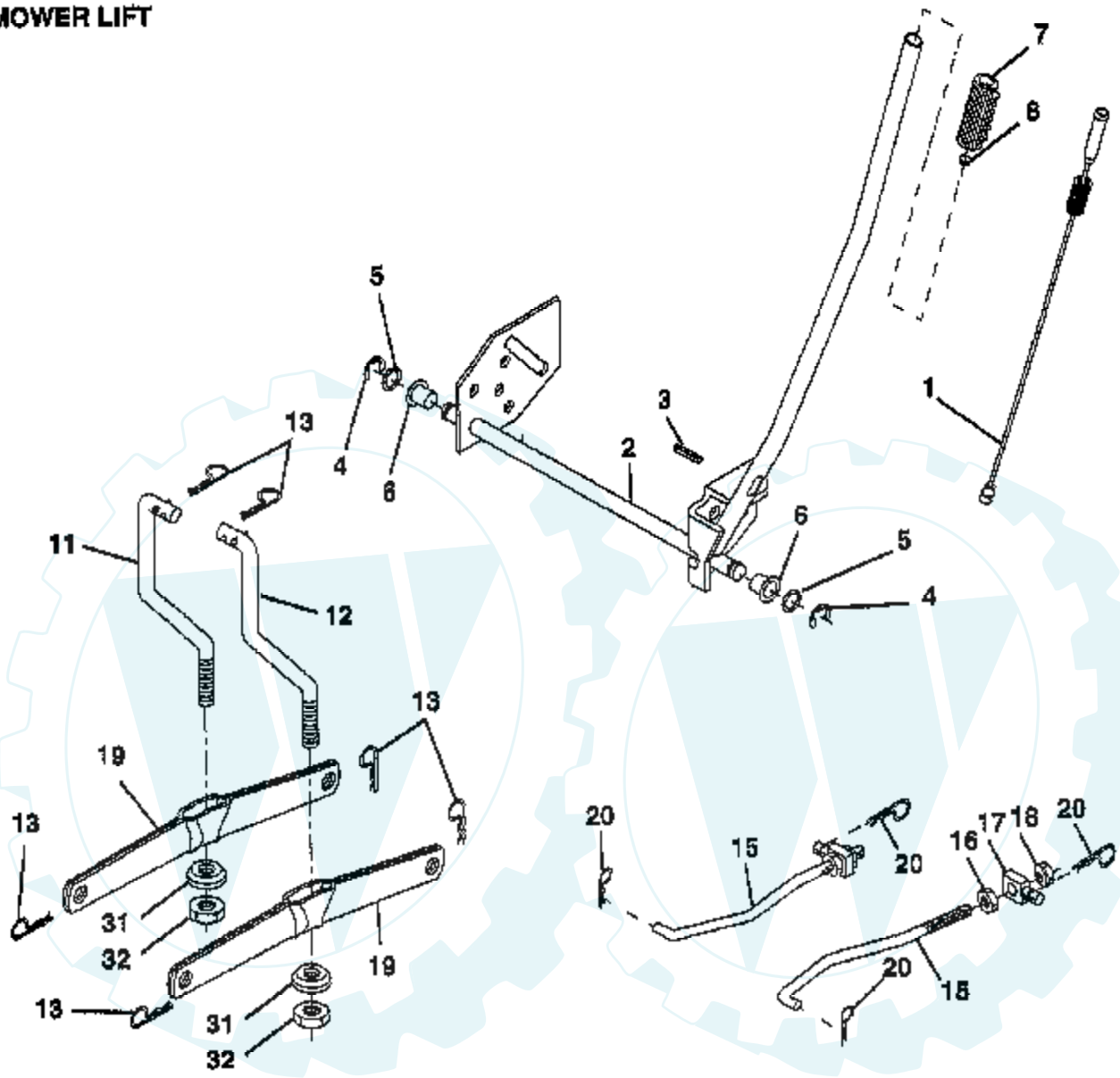

NOTE: All component dimensions given in U.S. inches
1 inch = 25.4 mm.

Der Ersatzteilspezialist im Internet.

www.ersatzteil-service.de

Ref #	Part Number	Qty	Description
1	159460		WIRE ASM W.SPRING
2	159474		SHAFT ASM.LIFT
3	105767X		PIN-GROOVE LT
4	12000002		SUB= 2225J
5	19211621		WASHER
6	120183X		NYLON BEARING
7	109413X		GRIP
8	124526X		SUB= 125925X
11	139865		SUB= 918139865
12	139866		SUB= 151140
13	4939M		SUB= 85902
15	127218		LINK.FRONT
16	73350800		NUT
17	130171		TRUNION
18	73800800		NUT.LK.W/WSH.1/2.
19	139868		ARM SUSP REAR
20	163552		RETAINER SPRING
31	140302		BEARING PVT LH
32	73540600		NUT.CROWNLOCK.3/8

Der Ersatzteilspezialist im Internet.

www.ersatzteil-service.de

TRACTOR - - MODEL NUMBER CT12T38E

SCHEMATIC

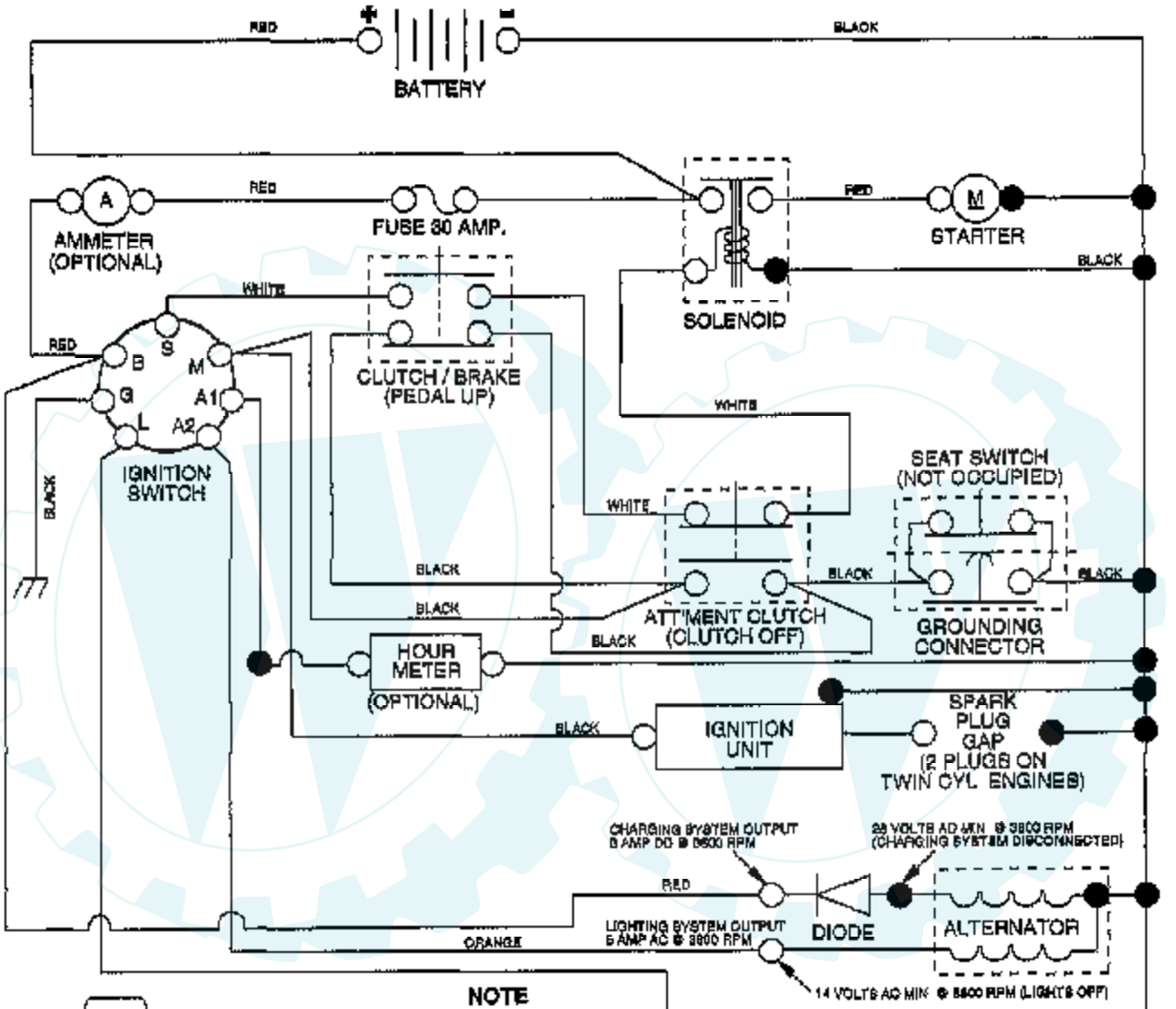

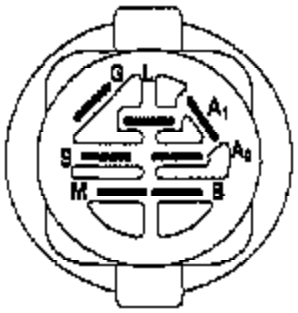

IGNITION SWITCH

POSITION	CIRCUIT	"MAKE"
OFF	M+G+A1	NONE
RUN/LIGHT	B+A1	A2+L
RUN	B+A1	NONE
START	B + S + A1	NONE

NOTE

YOUR TRACTOR IS EQUIPPED WITH A SPECIAL ALTERNATOR SYSTEM. THE LIGHTS ARE NOT CONNECTED TO THE BATTERY, BUT HAVE THEIR OWN ELECTRICAL SOURCE BECAUSE OF THIS, THE BRIGHTNESS OF THE LIGHTS WILL CHANGE WITH ENGINE SPEED. AT IDLE THE LIGHTS WILL DIM. AS THE ENGINE IS SPEEDED UP, THE LIGHTS WILL BECOME THEIR BRIGHTEST

NON-REMOVABLE CONNECTIONS

REMOVABLE CONNECTIONS

WIRING INSULATED CLIPS

NOTE: IF WIRING INSULATED CLIPS WERE REMOVED FOR SERVICING OF UNIT, THEY SHOULD BE REPLACED TO PROPERLY SECURE YOUR WIRING.

Der Ersatzteilspezialist im Internet.

www.ersatzteil-service.de

TRACTOR - - MODEL NUMBER CT12T38E

SEAT ASSEMBLY

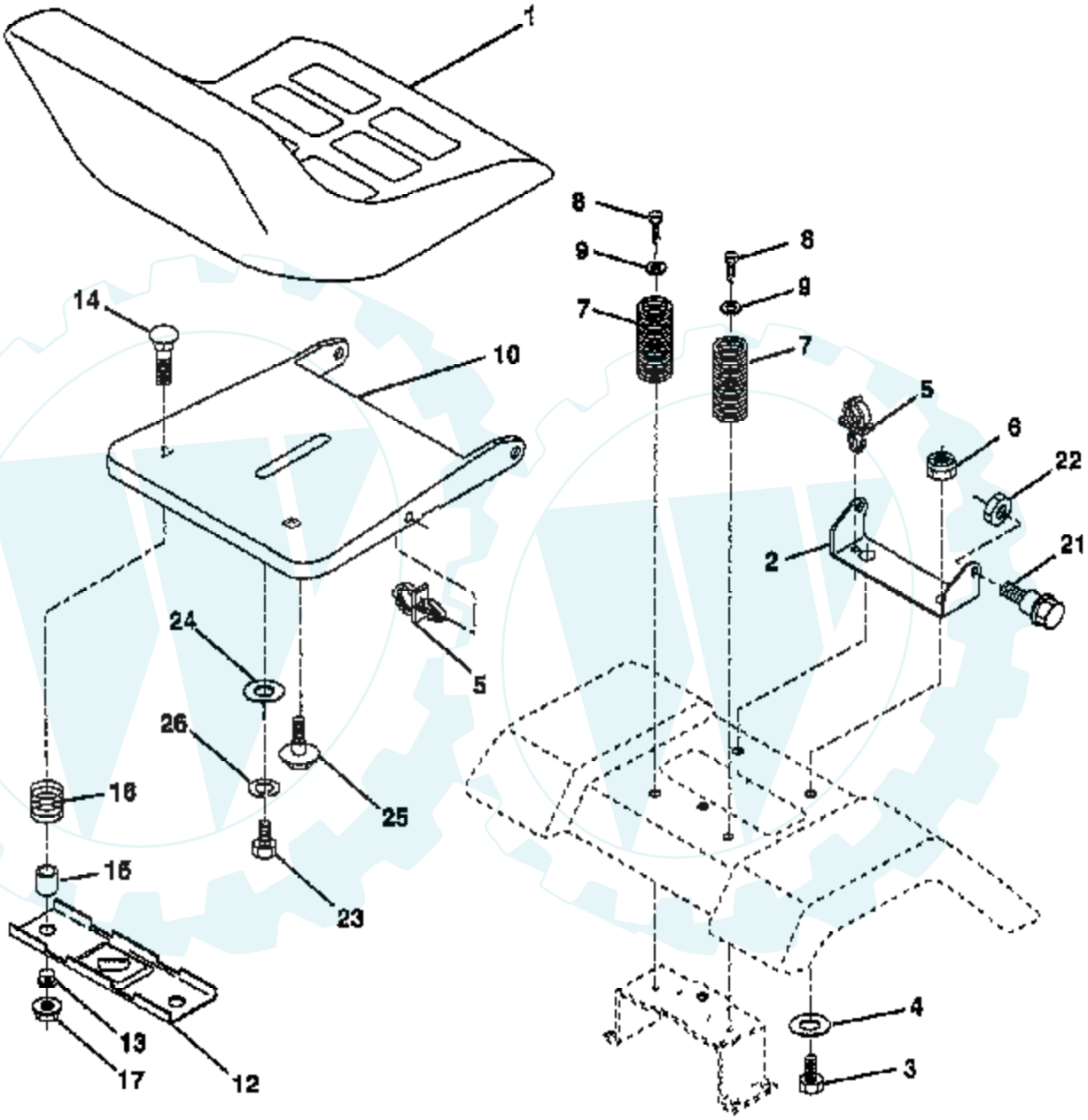

NOTE: All component dimensions given in U.S. inches
1 inch = 25.4 mm

Der Ersatzteilspezialist im Internet.

www.ersatzteil-service.de

Ref #	Part Number	Qty	Description
1	127426X		SUB= 140119
2	140551		BRACKET PVT SEAT
3	74760616		BOLT
4	19131610		WASHER PM
5	145006		CLIP.PUSH-IN.HING
6	73800600		NUT
7	124181X		SPRING COMPRESSIO
8	17490616		SCREW GTV
9	19131614		WASHER
10	155925		PAN-SEAT
12	121246X		BRKT SWITCH
13	121248X		BUSHING
14	72050412		BOLT-RD HD SQ NK
15	134300		SPLIT SPACER
16	121250X		SPRING
17	123976X		SUB= 73900400
21	153236		"BOLT,SHOULDER"
22	73800500		NUT
23	74780814		BOLT
24	19171912		WASHER
25	127018X		"BOLT,SHOULDER"
26	10040800		LOCKWASHER

Der Ersatzteilspezialist im Internet.

www.ersatzteil-service.de

TRACTOR - - MODEL NUMBER CT12T38E

STEERING

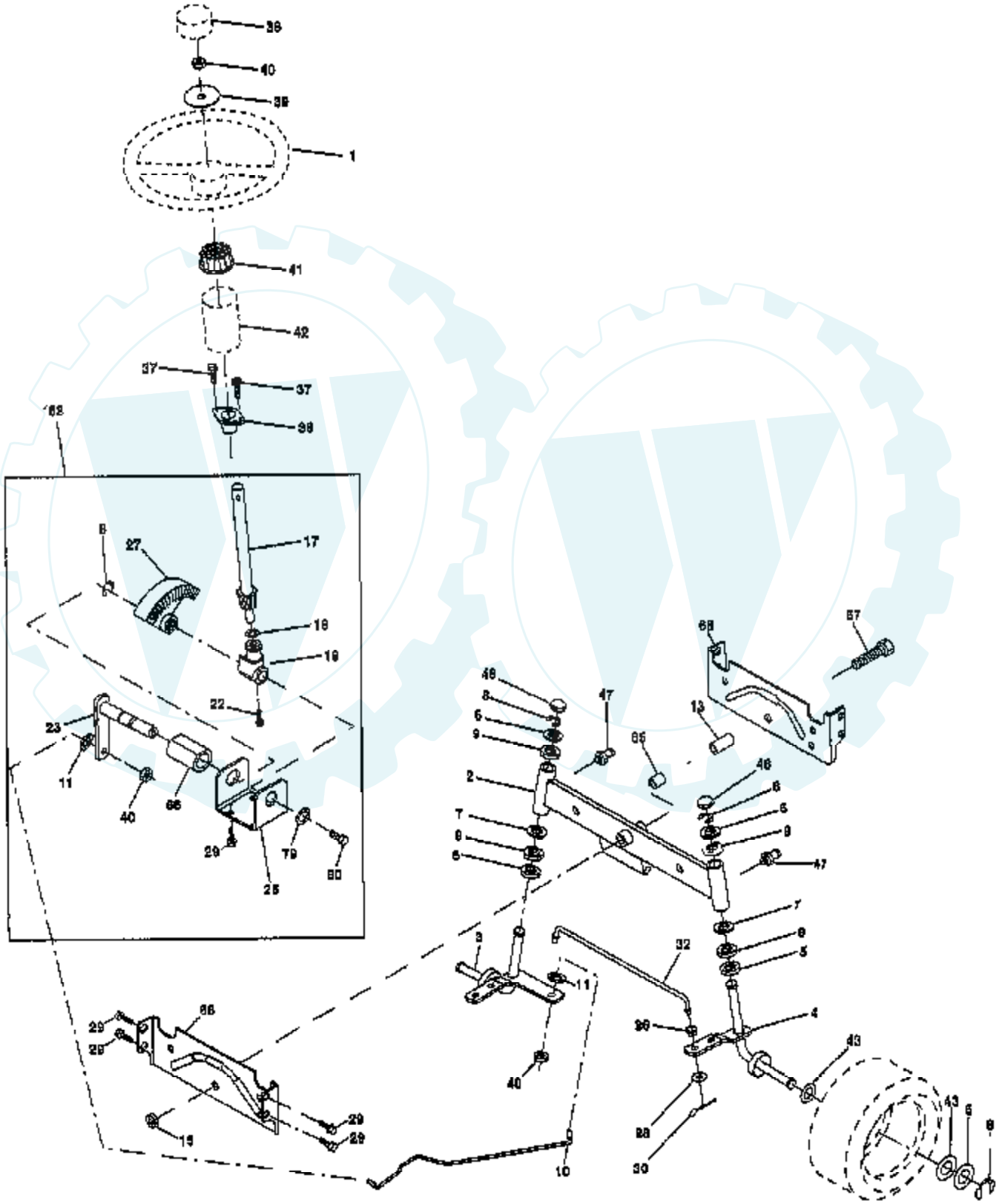

Der Ersatzteilspezialist im Internet.

www.ersatzteil-service.de

Ref #	Part Number	Qty	Description
1	133741		SUB= 150547
2	154427		AXLE ASM
3	156483		SPINDLE.ASM.LH
4	157473		"SPINDLE ASM,RH"
5	6266H		WASHER .T
6	121748X		WASHER
7	19272016		WASHER
8	12000029		RING
9	3366R		COL. SRTG. BEAR.
10	156438		DRAGLINK-STAMPED
11	10040600		LOCKWASHER
13	154779		BEARING AXLE
15	73901000		"NUT-LOC,FLANGE LT"
17	156545		SHAFT ASSM STEERN
18	57079		THRUST WASHER
19	160395		SUPPORT.SHAFT.STEER
22	165857		SCREW.HX.WSH.HD
23	165851		SHAFT.ASM.PITMAN
25	154406		BRKT-STEERING
26	126847X		BUSHING.DRAGLINK
27	136874		GEAR SECTOR
28	19131416		WASHER
29	17490612		SCREW
30	76020412		COTTER PIN
32	130465		TIE ROD
36	155099		BUSHING.STEERING
37	152927		"SCREW-TT,10-32 FL"
38	133742		ST WHL INSERT CAP
39	19133808		WASHER T
40	7810H		GRIPCO NUT
41	104820X		ADAPTER-WHEEL LT
42	124418X		"TUBE, STR SHAFT"
43	121749X		WASHER
46	121232X		CAP
47	6855M		ZERK M
62	167903		KIT.STEER.ASM
65	154780		SPACER AXLE
66	154404		"BEARING-ARM,PITMA"
67	74781044		BOLT
68	154429		BRACE AXLE
79	19132012		WASHER
80	74950612		BOLT.HX.NYLON3/8-16X3/

Der Ersatzteilspezialist im Internet.

www.ersatzteil-service.de

TRACTOR - - MODEL NUMBER CT12T38E

WHEELS & TIRES

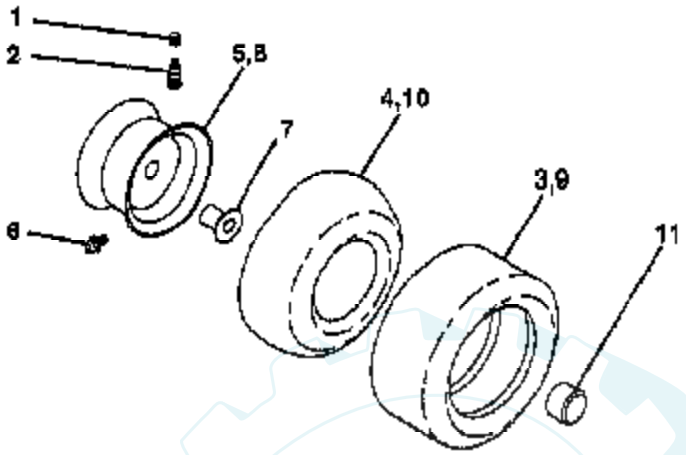

NOTE: All component dimensions given in U.S. inches
1 inch = 25.4 mm.

Der Ersatzteilspezialist im Internet.

www.ersatzteil-service.de

Ref #	Part Number	Qty	Description
1	59192		VALVE CAP
2	65139		VALVE STEM LT
3	124157X		SUB= 122073X
4	PARTSIMAGE		REFER TO PARTS IMAGE
4	59904		TUBE.5.3/4.5/6
5	106732X427		"RIM ASM 6"" FRT"
6	278H		FITTING LT
7	9040H		"FLANGE, BEARING"
8	106108X427		"RIM AS 8"" REAR"
9	123969X		TIRE.TS2.18X8.5
10	PARTSIMAGE		REFER TO PARTS IMAGE
10	7152J		TUBE.18X9.5-8
11	104757X		HUB CAP
	144334		SEALANT.TIRE 10 OZ. TUBE

Der Ersatzteilspezialist im Internet.